YANMAR

PARTS CATALOG

0CD50-M00540EN

Last update May., 2021

PREFACE

This parts catalog is the 1st edition of 3TNM74F-NHGE.

Published : July, 2014

Contents

0CD50-M00540

Fig. No.	Fig. Name
3TNM74F-NHGE	
1.	CYLINDER BLOCK
2.	GEAR HOUSING
3.	FLYWHEEL HOUSING & OIL SUMP
4.	CYLINDER HEAD & BONNET
5.	EXHAUST MANIFOLD
6.	CAMSHAFT & DRIVING GEAR
7.	CRANKSHAFT & PISTON
8.	LUB. OIL SYSTEM
9.	COOLING WATER SYSTEM
10.	FUEL INJECTION PUMP
11.	GOVERNOR
12.	FUEL INJECTION VALVE
13.	FUEL PIPE
14.	STARTER MOTOR
15.	GENERATOR

Fig.1. CYLINDER BLOCK

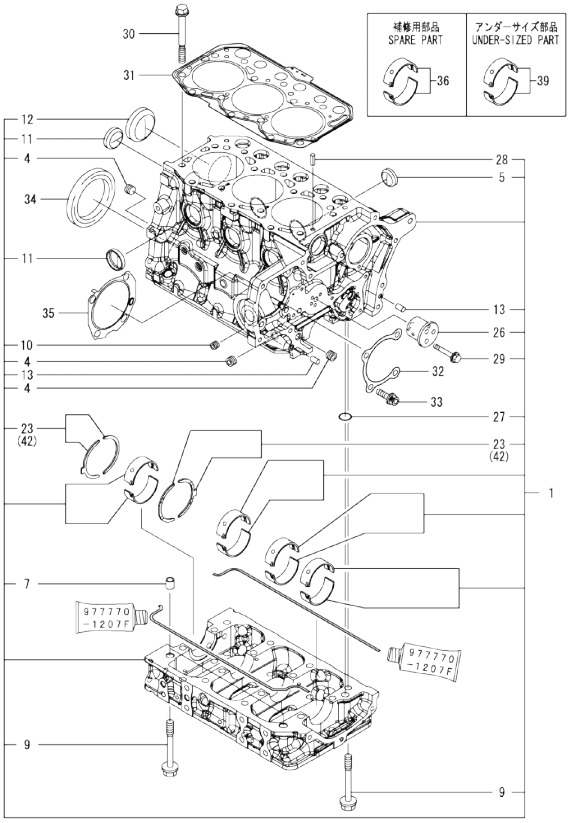

Remarks
(1)Spare parts.
(2)Under-sized(U.S.=0.25) parts.
(3)Over-sized(O.S.=0.25) parts.

(A)=3TNM74F-NHGE
(B)=
(C)=
(D)=
(E)=
(F)=

No.	Lev.	Parts No.	Description	Q'ty (A)	(B)	(C)	(D)	(E)	(F)	I	R
1	1	119D00-01560	BLOCK ASSY, CYLINDER	1							
4	2	124060-01050	PLUG, PT1/8	3							
5	2	119125-01970	PLUG, 25	3							
7	2	119125-01960	PIPE, KNOCK	2							
9	2	119125-02061	BOLT, METAL CAP	16							
10	2	23876-005000	PLUG, R005	1							
11	2	27241-300000	PLUG 30	4							
12	2	27241-450000	PLUG, 45	1							
13	2	119620-01620	PIN, M6X10	2							
23	2	119125-02930	BEARING, THRUST	2							
26	2	119125-25050	SHAFT, IDLE GEAR	1							
27	2	129900-32040	O-RING, P14	1							
28	2	22351-060012	PIN, SPRING 6.0X12	2							
29	2	26106-060402	BOLT, M6X 40 PLATED	3							
30	1	119810-01200	BOLT, HEAD	14							
31	1	119C10-01330	GASKET, HEAD	1							
32	1	119125-01790	GASKET	1							
33	1	119125-01800	FLANGE BOLT, M8X1.25	4							
34	1	119734-02220	SEAL, OIL	1							
35	1	119125-51800	GASKET	1							
36	1	119125-02900	BEARING, MAIN	4							1
39	1	119125-02910	BEARING, 0.25 US	4							2
42	1	119125-02940	BEARING, THRUST 0.25	2							3

N:Old $\frac{\text{Yes}}{\text{No}}$ New. Q:Old $\frac{\text{No}}{\text{Yes}}$ New. R:Old $\frac{\text{Yes}}{\text{Yes}}$ New. S:Old $\frac{\text{No}}{\text{No}}$ New. W:Add. Z:Discontinued. F:Interchangeable by set. K:Q'ty Change

Copyright (C) 2014 YANMAR GLOBAL CS CO., LTD. All RightsReserved.

Fig.2. GEAR HOUSING

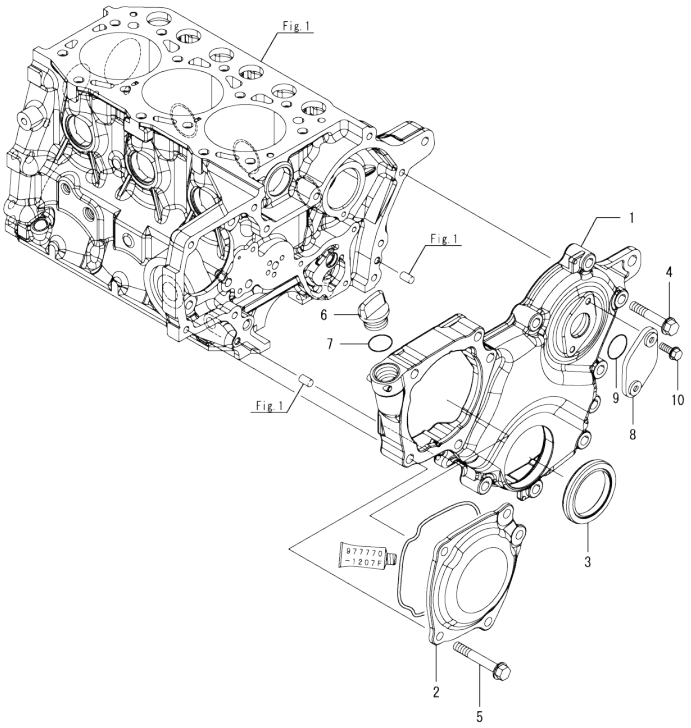

(A)=3TNM74F-NHGE (D)=
(B)= (E)=
(C)= (F)=

No.	Lev.	Parts No.	Description	Q'ty (A)	(B)	(C)	(D)	(E)	(F)	I	R
1	1	119025-01530	CASE, GEAR	1							
2	1	119125-01750	COVER	1							
3	1	119717-01800	SEAL, OIL	1							
4	1	26106-080352	BOLT, M8X 35 PLATED	8							
5	1	26106-080452	BOLT, M8X 45 PLATED	5							
6	1	106760-01770	CAP	1							
7	1	24311-000180	O-RING, 1AP18.0	1							
8	1	121023-01551	COVER	1							
9	1	24341-000240	O-RING, 1AS24.0	1							
10	1	26106-060162	BOLT, M6X 16 PLATED	2							

N:Old ←Yes/No→ New. Q:Old ←No/Yes→ New. R:Old ←Yes/Yes→ New. S:Old ←No/No→ New. W:Add. Z:Discontinued. F:Interchangeable by set. K:Q'ty Change

Copyright (C) 2014 YANMAR GLOBAL CS CO., LTD. All RightsReserved.

Fig.3. FLYWHEEL HOUSING & OIL SUMP

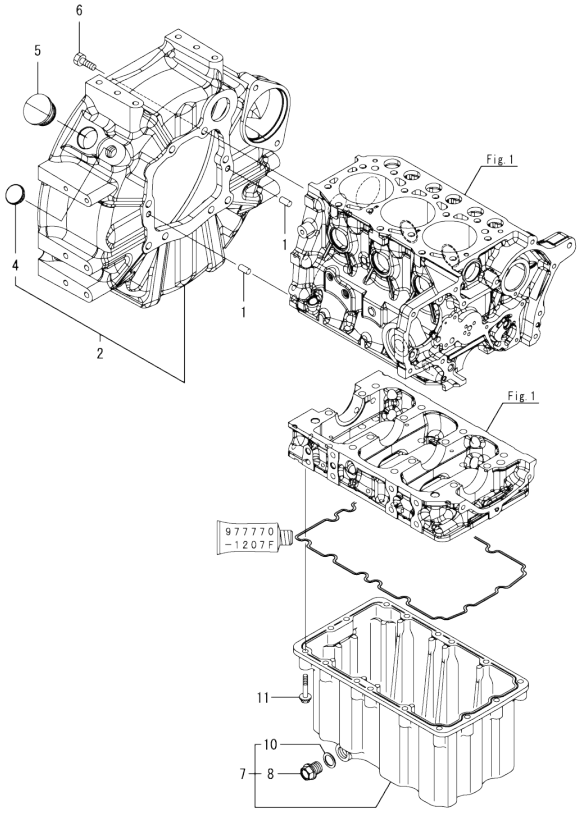

(A)=3TNM74F-NHGE (D)=
(B)= (E)=
(C)= (F)=

No.	Lev.	Parts No.	Description	Q'ty (A)	(B)	(C)	(D)	(E)	(F)	I	R
1	1	129100-01580	PIN, 8X16	2							
2	1	119D00-01610	HOUSING ASSY, WHEEL	1							
4	2	119888-01850	PLUG, RUBBER	1							
5	1	119620-01750	CAP	1							
6	1	26206-100252	BOLT, M10X 25 PLATED	8							
7	1	119025-01760	SUMP ASSY, OIL	1							
8	2	119025-01690	PLUG, DRAIN 16	1							
10	2	22190-160002	WASHER, SEAL 16	1							
11	1	26106-060352	BOLT, M6X 35 PLATED	16							

N:Old ←Yes/No→ New. Q:Old ←No/Yes→ New. R:Old ←Yes/Yes→ New. S:Old ←No/No→ New. W:Add. Z:Discontinued. F:Interchangeable by set. K:Q'ty Change

Copyright (C) 2014 YANMAR GLOBAL CS CO., LTD. All RightsReserved.

Fig.4. CYLINDER HEAD & BONNET

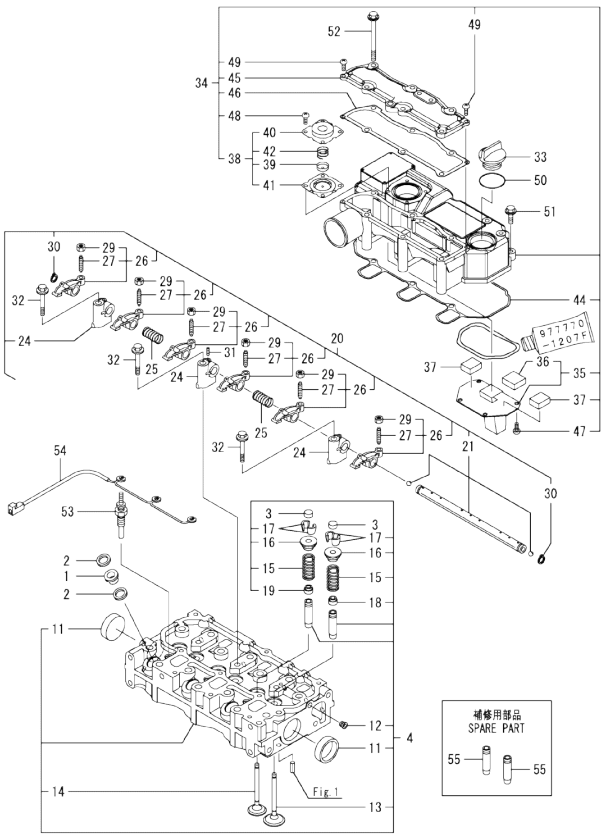

(A)=3TNM74F-NHGE
(B)=
(C)=
(D)=
(E)=
(F)=

No.	Lev.	Parts No.	Description	Q'ty (A)	(B)	(C)	(D)	(E)	(F)	I	R
1	1	129901-11450	PROTECTOR, NOZZLE	3							
2	1	119600-11460	GASKET, NOZZLE	6							
3	1	105010-11490	CAP, VALVE	6							
4	1	119D00-11740	HEAD ASSY, CYLINDER	1							
11	2	119285-11990	PLUG, 35	2							
12	2	23876-005000	PLUG, R005	1							
13	2	119C10-11100	VALVE, SUCTION	3							
14	2	119C10-11110	VALVE, EXHAUST	3							
15	2	119717-11131	SPRING, VALVE	6							
16	2	129508-11180	RETAINER, SPRING	6							
17	2	119717-11190	COTTER	12							
18	2	119717-11340	SEAL, VALVE STEM	3							
19	2	119717-11350	SEAL, VALVE STEM	3							
20	1	119515-11200	SUPPORT ASSY, ARM	1							
21	2	119515-11240	SHAFT ASSY, ROCKER	1							
24	2	119717-11260	SUPPORT, ROCKER ARM	3							
25	2	119515-11280	SPRING	2							
26	2	119717-11650	ARM, ROCKER	6							
27	3	129150-11230	SCREW, VALVE ADJUST	6							
29	3	129150-11750	NUT, M8	6							
30	2	22242-000120	RING, 12	2							
31	2	26979-050162	SCREW, M5X16	1							
32	1	26106-080402	BOLT, M8X 40 PLATED	3							
33	1	124160-01751	COVER, FILLER	1							
34	1	119515-11380	BONNET ASSY, HEAD	1							
35	2	119717-03031	PLATE	1							
36	3	119717-03070	BAFFLE, BREATHER	1							
37	2	119717-03070	BAFFLE, BREATHER	2							
38	2	119802-03100	DIAPHRAGM ASSY	1							
39	3	119802-03110	PLATE	1							
40	3	119802-03121	COVER, DIAPHRAGM	1							
41	3	119802-03131	DIAPHRAGM	1							
42	3	119802-03141	SPRING, DIAPHRAGM	1							
44	2	119515-11310	GASKET, BONNET	1							
45	2	119515-11320	COVER, BONNET	1							
46	2	119515-11330	GASKET	1							
47	2	22857-500100	SCREW, 5X10	4							
48	2	22857-500100	SCREW, 5X10	4							
49	2	22857-500160	SCREW, 5X16	2							
50	1	24311-000320	O-RING, 1AP32.0	1							
51	1	26106-060202	BOLT, M6X 20 PLATED	3							
52	1	26106-060752	BOLT, M6X 75 PLATED	6							
53	1	119717-77801	PLUG, GLOW	3							
54	1	119717-77820	CONNECTOR, GLOW PLUG	1							
55	1	119515-11800	GUIDE, VALVE	6							1

Remarks
(1)Spare parts.

N:Old ←Yes/No→ New. Q:Old ←No/Yes→ New. R:Old ←Yes/Yes→ New. S:Old ←No/No→ New. W:Add. Z:Discontinued. F:Interchangeable by set. K:Q'ty Change

Copyright (C) 2014 YANMAR GLOBAL CS CO., LTD. All RightsReserved.

0CD50-M00540 3TNM74F-NHGE

Fig.5. EXHAUST MANIFOLD

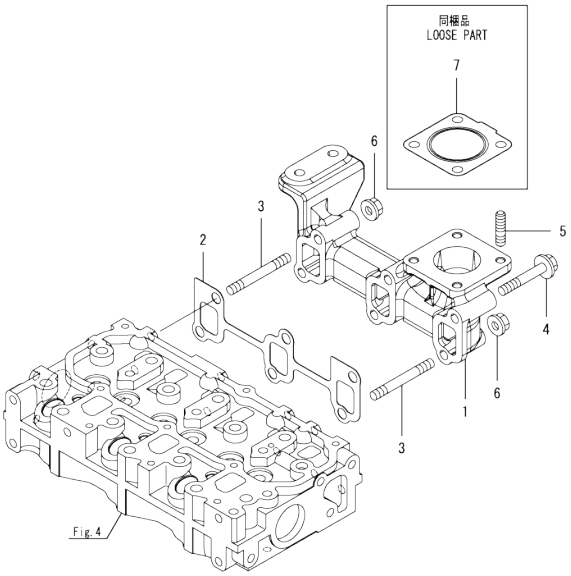

0CD50-M00540 Fig.5

(A)=3TNM74F-NHGE (D)=
(B)= (E)=
(C)= (F)=

No.	Lev.	Parts No.	Description	Q'ty (A)	(B)	(C)	(D)	(E)	(F)	I	R
1	1	119717-13109	MANIFOLD, EXHAUST	1							
2	1	119717-13110	GASKET	1							
3	1	119717-13600	STUD, M8X50	2							
4	1	119802-13620	BOLT, M8X50	4							
5	1	119131-18320	STUD, M8X22	4							
6	1	26306-080002	NUT, M8	2							
7	1	119515-13200	GASKET, SILENCER	1							

N:Old ◄Yes/No► New. Q:Old ◄No/Yes► New. R:Old ◄Yes/Yes► New. S:Old ◄No/No► New. W:Add. Z:Discontinued. F:Interchangeable by set. K:Q'ty Change

Copyright (C) 2014 YANMAR GLOBAL CS CO., LTD. All RightsReserved.

Fig.6. CAMSHAFT & DRIVING GEAR

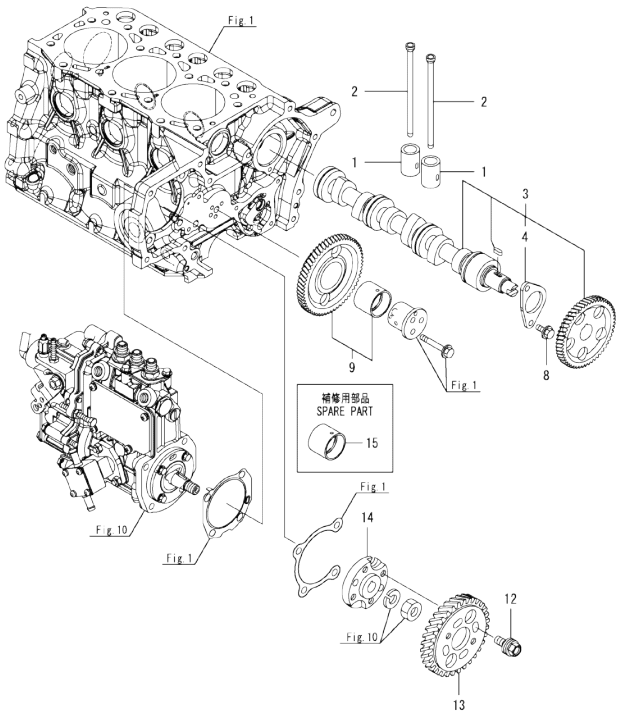

(A)=3TNM74F-NHGE (D)=
(B)= (E)=
(C)= (F)=

No.	Lev.	Parts No.	Description	Q'ty (A)	(B)	(C)	(D)	(E)	(F)	I	R
1	1	119620-14200	TAPPET	6							
2	1	119515-14400	ROD, PUSH	6							
3	1	119025-14580	CAMSHAFT ASSY	1							
4	2	119620-02450	BEARING, THRUST	1							
8	1	26106-060122	BOLT, M6X 12 PLATED	2							
9	1	119025-25100	GEAR ASSY, IDLE	1							
12	1	129150-25301	BOLT	4							
13	1	119125-25930	GEAR, PUMP	1							
14	1	119717-51150	FLANGE	1							
15	1	119125-25910	BUSH, IDLE GEAR	1							1

Remarks
(1)Spare parts.

N:Old $\frac{\text{Yes}}{\text{No}}$ New. Q:Old $\frac{\text{No}}{\text{Yes}}$ New. R:Old $\frac{\text{Yes}}{\text{Yes}}$ New. S:Old $\frac{\text{No}}{\text{No}}$ New. W:Add. Z:Discontinued. F:Interchangeable by set. K:Q`ty Change

Copyright (C) 2014 YANMAR GLOBAL CS CO., LTD. All RightsReserved.

Fig.7. CRANKSHAFT & PISTON

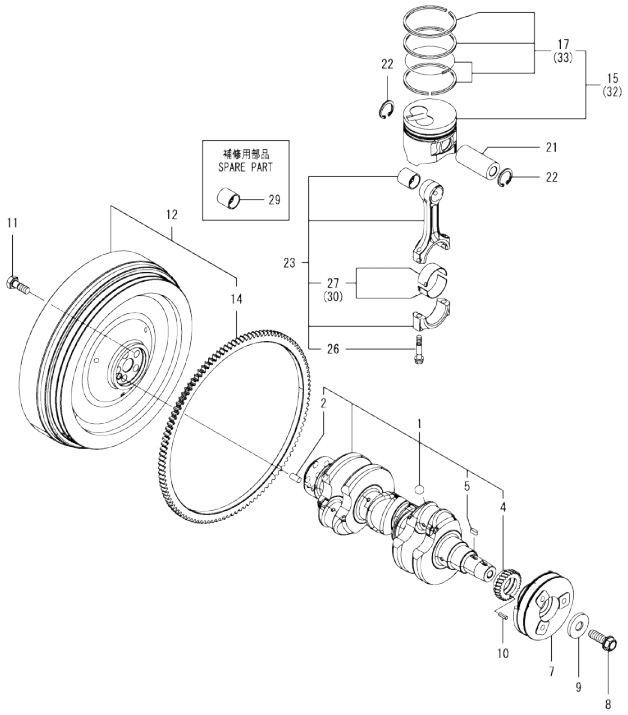

(A)=3TNM74F-NHGE
(B)=
(C)=
(D)=
(E)=
(F)=

No.	Lev.	Parts No.	Description	Q'ty (A)	(B)	(C)	(D)	(E)	(F)	I	R
1	1	119D00-21700	CRANKSHAFT ASSY	1							
2	2	129100-01580	PIN, 8X16	1							
4	2	119125-21200	GEAR, CRANKSHAFT	1							
5	2	22512-040120	KEY, 4X 12	1							
7	1	119125-21650	V-PULLEY	1							
8	1	119621-21681	BOLT, FLANGE 12X1.25	1							
9	1	119620-21941	WASHER	1							
10	1	22351-030010	PIN, SPRING 3.0X10	1							
11	1	121111-21501	BOLT, FLYWHEEL	5							
12	1	119D00-21580	FLYWHEEL ASSY	1							
14	2	119865-21600	GEAR, RING	1							
15	1	119D00-22080	PISTON ASSY	3							
17	2	119C10-22500	RING ASSY	3							
21	1	119717-22300	PIN, PISTON	3							
22	1	22252-000220	RING, 22	6							
23	1	119515-23000	ROD ASSY, CONNECTING	3							
26	2	119717-23200	BOLT, CONNECTING ROD	6							
27	2	119515-23601	BEARING, CRANK PIN	3							
29	1	119717-23910	BEARING, PISTON PIN	3							1
30	1	119515-23611	METAL ASSY, 0.25	3							2
32	1	119D00-22900	PISTON ASSY, 0.25 OS	3							3
33	2	119C10-22550	RING ASSY ,0.25	3							3

Remarks
(1)Spare parts.
(2)Under-sized(U.S.=0.25) parts.
(3)Over-sized(O.S.=0.25) parts.

N:Old ←Yes/No→ New. Q:Old ←No/Yes→ New, R:Old ←Yes/Yes→ New. S:Old ←No/No→ New. W:Add. Z:Discontinued. F:Interchangeable by set. K:Q'ty Change

Copyright (C) 2014 YANMAR GLOBAL CS CO., LTD. All RightsReserved.

Fig.8. LUB. OIL SYSTEM

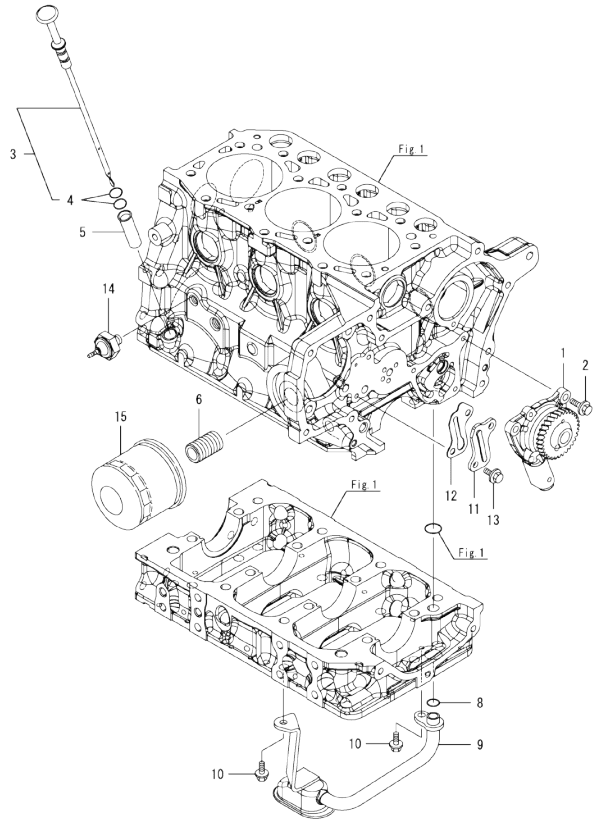

(A)=3TNM74F-NHGE (D)=
(B)= (E)=
(C)= (F)=

No.	Lev.	Parts No.	Description	Q'ty (A)	(B)	(C)	(D)	(E)	(F)	I	R
1	1	119125-32000	PUMP ASSY, OIL	1							
2	1	26106-060142	BOLT, M6X 14 PLATED	3							
3	1	119025-34810	DIPSTICK, OIL	1							
4	2	119125-34900	O-RING	2							
5	1	119125-34810	GUIDE, DIPSTICK	1							
6	1	119717-35140	BOLT	1							
8	1	119209-35030	O-RING, P11	1							
9	1	119028-35080	PIPE ASSY, OIL INLET	1							
10	1	26106-060102	BOLT, M6X 10 PLATED	2							
11	1	119125-39200	COVER	1							
12	1	119125-39220	GASKET	1							
13	1	26106-060122	BOLT, M6X 12 PLATED	2							
14	1	114250-39450	SWITCH, 0.5KG	1							
15	1	119305-35170	FILTER ASSY, D68XL65	1							1

Remarks
(1)Spare parts.

N:Old ←Yes/No→ New. Q:Old ←No/Yes→ New. R:Old ←Yes/Yes→ New. S:Old ←No/No→ New. W:Add. Z:Discontinued. F:Interchangeable by set. K:Q'ty Change

Copyright (C) 2014 YANMAR GLOBAL CS CO., LTD. All RightsReserved.

Fig.9. COOLING WATER SYSTEM

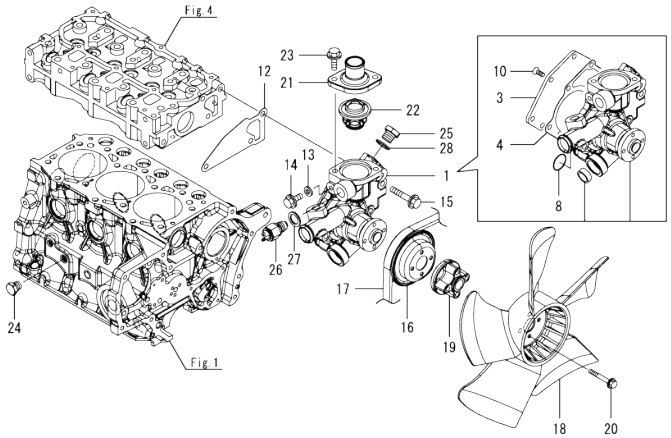

(A)=3TNM74F-NHGE (D)=
(B)= (E)=
(C)= (F)=

No.	Lev.	Parts No.	Description	Q'ty (A)	(B)	(C)	(D)	(E)	(F)	I	R
1	1	119025-42000	PUMP ASSY, WATER	1							
3	2	119025-42020	COVER	1							
4	2	119025-42030	GASKET, WATER PUMP	1							
8	2	119685-42281	O-RING	1							
10	2	26577-060122	SCREW, M6X12	5							
12	1	119515-42020	GASKET, WATER PUMP	1							
13	1	23414-080000	GASKET, 8X1.0	1							
14	1	26106-080122	BOLT, M8X 12 PLATED	1							
15	1	26106-080452	BOLT, M8X 45 PLATED	3							
16	1	119740-42350	V-PULLEY, D=90	1							
17	1	25132-003450	V-BELT, A34.5	1							
18	1	119265-44740	FAN, D=310X5F	1							
19	1	129457-44760	SPACER, FAN	1							
20	1	26106-060452	BOLT, M6X 45 PLATED	4							
21	1	129350-49530	COVER, THERMOSTAT	1							
22	1	119717-49800	THERMOSTAT, 71	1							
23	1	26106-080202	BOLT, M8X 20 PLATED	2							
24	1	171056-49120	PLUG, DRAIN	1							
25	1	121450-42450	PLUG, M16	1							
26	1	121250-44901	SWITCH, 110	1							
27	1	124465-44950	GASKET, 16	1							
28	1	124465-44950	GASKET, 16	1							

N:Old ←Yes/No→ New. Q:Old ←No/Yes→ New. R:Old ←Yes/Yes→ New. S:Old ←No/No→ New. W:Add. Z:Discontinued. F:Interchangeable by set. K:Q'ty Change

Copyright (C) 2014 YANMAR GLOBAL CS CO., LTD. All RightsReserved.

Fig.10. FUEL INJECTION PUMP

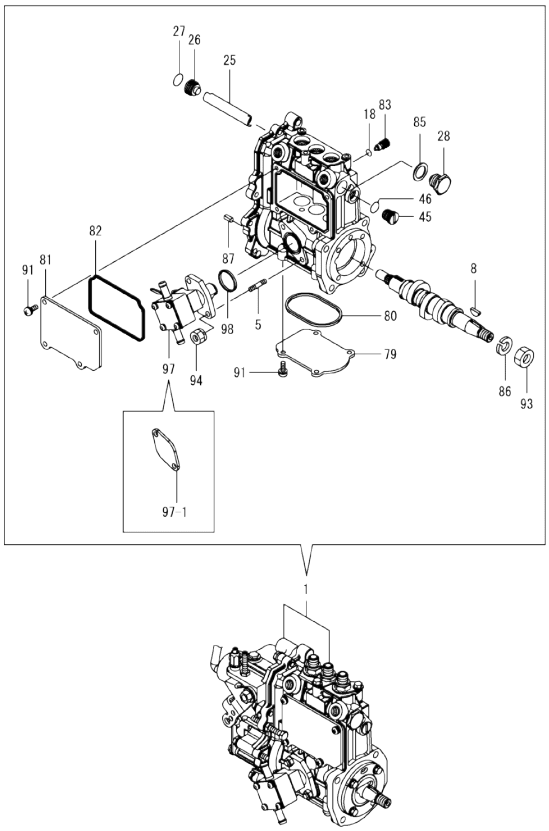

(A)=3TNM74F-NHGE (D)=
(B)= (E)=
(C)= (F)=

No.	Lev.	Parts No.	Description	Q'ty (A)	(B)	(C)	(D)	(E)	(F)	I	R
1	1	719D28-51490	FIE ASSY	1							1
1-1	1	719D28-51310	FIE ASSY	1						N	1
	(A=E25147)										
5	2	129155-51020	BOLT, STUD	2							
8	2	122710-51090	FEATHER KEY,WOODRUFF	1							
18	2	129155-51280	O-RING, S6	1							
25	2	129155-51400	DEFLECTOR	1							
26	2	158600-51410	PLUG, DEFLECTOR	1							
27	2	119717-51420	O-RING	1							
28	2	158600-51420	PLUG, DEFLECTOR	1							
45	2	158600-51570	PLUG, RACK	1							
46	2	129155-51580	O-RING	1							
79	2	119125-51700	COVER, PUMP	1							
80	2	119717-51711	GASKET	1							
81	2	119717-51750	COVER	1							
82	2	119717-51761	GASKET	1							
83	2	158600-51790	STOPPER, RACK	1							
85	2	22190-160002	WASHER, SEAL 16	1							
86	2	22217-120000	WASHER, SPRING 12	1							
87	2	22351-050010	PIN, SPRING 5.0X10	2							
91	2	26022-050122	SCREW, M5X12	8							
93	2	26716-120002	NUT, M12	1							
94	2	119717-51860	NUT, M6	2							
97	2	119125-52000	PUMP ASSY, FUEL FEED	1							
97-1	2	129100-52200	COVER, FEED PUMP	1						W	
	(A=E25147)										
98	2	129155-52051	GASKET	1							

Remarks
(1)Governor(Fig.11) is incorporated in this Fuel Injection Pump(No.1).

N:Old ◄Yes/No► New. Q:Old ◄No/Yes► New, R:Old ◄Yes/Yes► New, S:Old ◄No/No► New. W:Add. Z:Discontinued. F:Interchangeable by set. K:Q'ty Change

Copyright (C) 2014 YANMAR GLOBAL CS CO., LTD. All RightsReserved.

Fig.11. GOVERNOR

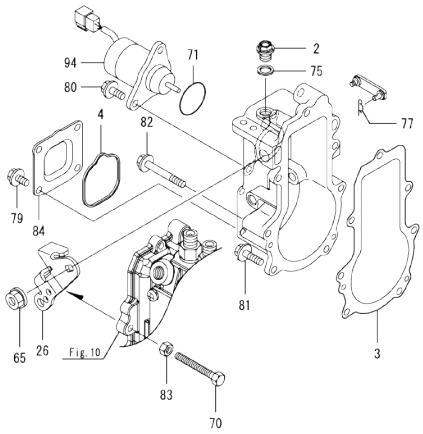

Remarks
* This figure(Governor) is incorporated in the Fuel Injection Pump(Fig.10).

(A)=3TNM74F-NHGE (D)=
(B)= (E)=
(C)= (F)=

No.	Lev.	Parts No.	Description	Q'ty (A)	(B)	(C)	(D)	(E)	(F)	I	R
2	2	119717-51930	PLUG, M10	1							
3	2	119717-61050	GASKET	1							
4	2	119717-61070	GASKET	1							
26	2	119546-61440	LEVER, CONTROL	1							
65	2	26366-080002	NUT, M8	1							
70	2	129155-61460	BOLT, LIMITING	1							
70-1	2	129155-61461	BOLT,IDLE LIMIT	1						N	
	(A=E25147)										
71	2	158552-61900	O-RING	1							
75	2	22190-100002	WASHER, SEAL 10	1							
77	2	22372-040000	PIN, SNAP 4	1							
79	2	26106-060102	BOLT, M6X 10 PLATED	4							
80	2	26106-060142	BOLT, M6X 14 PLATED	2							
81	2	26106-060202	BOLT, M6X 20 PLATED	4							
82	2	26106-060452	BOLT, M6X 45 PLATED	3							
83	2	26756-060002	NUT, LOCK M6	1							
83-1	2	119740-61470	NUT	1						N	
	(A=E25147)										
84	2	119717-61060	COVER, GOVERNOR CASE	1							
94	2	119653-77950	SOLENOID, STOP	1							
94-1	2	129630-77910	SOLENOID, STOP	1						N	
	(A=E25147)										

N:Old ◄Yes/No► New. Q:Old ◄No/Yes► New, R:Old ◄Yes/Yes► New, S:Old ◄No/No► New. W:Add. Z:Discontinued. F:Interchangeable by set. K:Q'ty Change

Copyright (C) 2014 YANMAR GLOBAL CS CO., LTD. All RightsReserved.

Fig.12. FUEL INJECTION VALVE

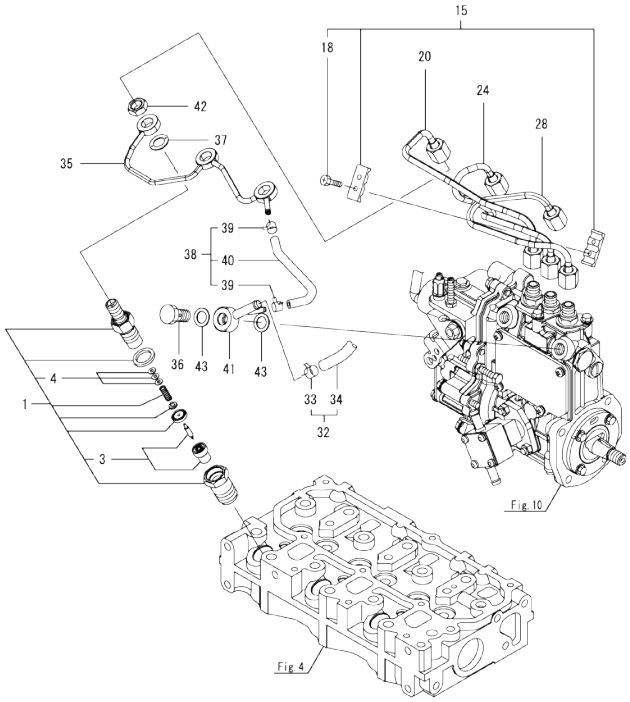

(A)=3TNM74F-NHGE
(B)=
(C)=
(D)=
(E)=
(F)=

No.	Lev.	Parts No.	Description	Q'ty (A)	(B)	(C)	(D)	(E)	(F)	I	R
1	1	119C10-53000	NOZZLE ASSY, F.I.	3							
3	2	119C10-53010	NOZZLE ASSY	3							
4	2	129901-53800	SHIM SET, ADJUSTING	3							1
15	1	129150-59120	RETAINER, PIPE	1							
18	2	129150-59131	BOLT, M4X14	2							
20	1	119D00-59810	PIPE ASSY,INJ,NO1	1							
24	1	119D00-59820	PIPE ASSY,INJ,NO2	1							
28	1	119D00-59830	PIPE ASSY,INJ,NO3	1							
32	1	129210-59140	HOSE ASSY, FUEL	1							
32-1	1	119546-59031	PIPE ASSY, FUEL	1						S	
	(A=E25227)										
33	2	124766-59050	CLAMP, HOSE 11.5	2							
33-1	2	114270-59010	CLAMP, HOSE 12	2						S	
	(A=E25227)										
34	2	105230-59510	HOSE, FUEL	1							
34-1	2	119546-59531	PIPE, FUEL	1						S	
	(A=E25227)										
35	1	119D00-59540	PIPE ASSY, FO RETURN	1							
36	1	119125-59560	BOLT, PIPE JOINT	1							
37	1	129901-59560	GASKET	3							
38	1	119125-59570	HOSE ASSY, RETURN	1							
38-1	1	129486-59582	PIPE ASSY, FO RETURN	1						S	
	(A=E25227)										
39	2	124066-59100	CLAMP, HOSE 8	2							
40	2	119000-59550	HOSE, FUEL RETURN	1							
40-1	2	129486-59522	PIPE, FO RETURN	1						S	
	(A=E25227)										
41	1	119840-59570	JOINT	1							
42	1	119620-59700	NUT, NOZZLE	3							
43	1	22190-120002	WASHER, SEAL 12	2							

Remarks
(1)Spare parts.

N:Old $\frac{\text{Yes}}{\text{No}}$ New. Q:Old $\frac{\text{No}}{\text{Yes}}$ New. R:Old $\frac{\text{Yes}}{\text{Yes}}$ New. S:Old $\frac{\text{No}}{\text{No}}$ New. W:Add. Z:Discontinued. F:Interchangeable by set. K:Q'ty Change

Copyright (C) 2014 YANMAR GLOBAL CS CO., LTD. All RightsReserved.

Fig.13. FUEL PIPE

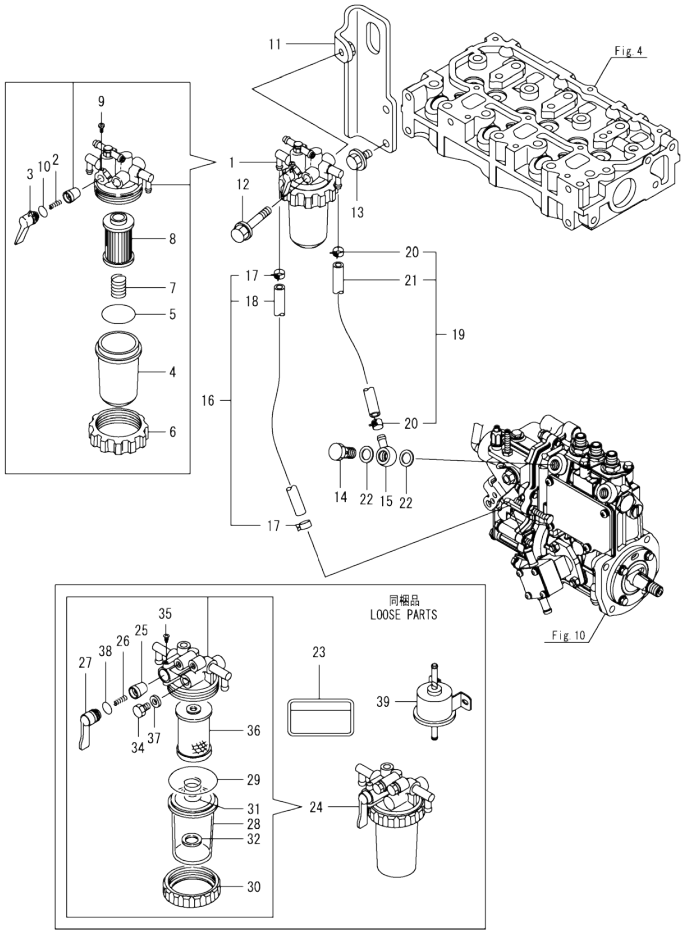

(A)=3TNM74F-NHGE (D)=
(B)= (E)=
(C)= (F)=

No.	Lev.	Parts No.	Description	Q'ty (A)	(B)	(C)	(D)	(E)	(F)	I	R
1	1	119833-55621	FILTER ASSY, FUEL	1							
1-1	1	119E20-55600	FILTER ASSY, FUEL	1						N	
	(A=E23228)										
2	2	104200-55330	SPRING, FUEL VALVE	1							
3	2	119810-55340	LEVER, FUEL	1							
4	2	121254-55510	CUP, FUEL STARINER	1							
5	2	102103-55520	O-RING	1							
6	2	110250-55610	RING, CUP RETAINING	1							
7	2	121250-55620	SPRING, ELEMENT	1							
8	2	119810-55650	ELEMENT	1							
9	2	104200-55750	SCREW, PAN M4	1							
10	2	24311-240100	O-RING, 1AP10A	1							
11	1	119028-55650	BRACKET, FILTER	1							
12	1	26014-080702	BOLT, M8X 70	1							
13	1	26106-080162	BOLT, M8X 16 PLATED	2							
14	1	103854-39140	BOLT, PIPE JOINT	1							
15	1	101304-59020	JOINT, PIPE 12	1							
16	1	129210-59140	HOSE ASSY, FUEL	1						Z	
	(A=E25227)										
17	2	124766-59050	CLAMP, HOSE 11.5	2						Z	
	(A=E25227)										
18	2	105230-59510	HOSE, FUEL	1						Z	
	(A=E25227)										
19	1	129210-59230	HOSE ASSY, FUEL	1							
19-1	1	129988-59000	PIPE ASSY, FUEL	1						S	
	(A=E25227)										
20	2	124766-59050	CLAMP, HOSE 11.5	2							
20-1	2	114270-59010	CLAMP, HOSE 12	2						S	
	(A=E25227)										
21	2	129555-59511	HOSE, FUEL	1							
21-1	2	129236-59501	PIPE, FUEL	1						S	
	(A=E25227)										
22	1	22190-120002	WASHER, SEAL 12	2							
23	1	114110-07761	LABEL, FUEL OIL CAUT	1							
24	1	129335-55701	SEPARATOR ASSY,WATER	1							
24-1	1	119741-55700	SEPARATOR ASSY,WATER	1						N	
	(A=E23228)										
25	2	104200-55321	VALVE, TAPER	1							
26	2	104200-55330	SPRING, FUEL VALVE	1							
27	2	104200-55341	HANDLE, COCK	1							
28	2	124064-55510	CUP, FUEL STARINER	1							
29	2	102103-55520	O-RING	1							
29-1	2	24316-000440	O-RING, 4DP44.0	1						N	
	(A=E23228)										
30	2	110250-55610	RING, CUP RETAINING	1							
31	2	121257-55720	SPRING, FILTER	1							
32	2	121257-55731	FLOAT	1							
34	2	101720-55750	PLUG, HEXAGON M6	2							
35	2	104200-55750	SCREW, PAN M4	1							
36	2	171081-55910	FILTER, FUEL	1							
37	2	23418-060000	GASKET, 6X1.0	2							

N:Old ←Yes/No→ New. Q:Old ←No/Yes→ New. R:Old ←Yes/Yes→ New. S:Old ←No/No→ New. W:Add. Z:Discontinued. F:Interchangeable by set. K:Q'ty Change

++ CONTINUE ++

Copyright (C) 2014 YANMAR GLOBAL CS CO., LTD. All RightsReserved.

Fig.13. FUEL PIPE

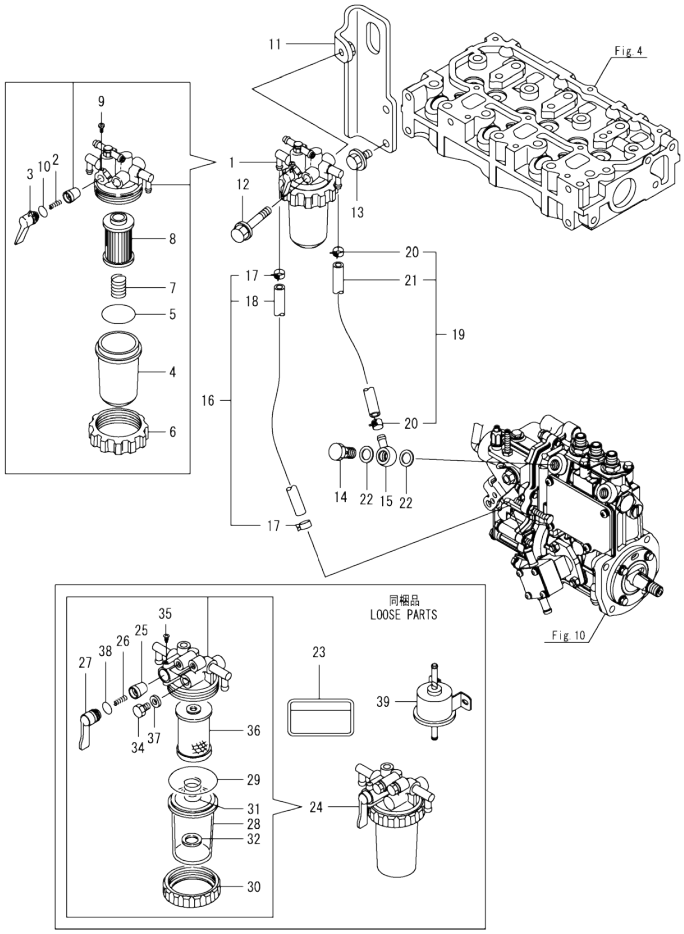

(A)=3TNM74F-NHGE (D)=
(B)= (E)=
(C)= (F)=

No.	Lev.	Parts No.	Description	Q'ty (A)	(B)	(C)	(D)	(E)	(F)	I	R
38	2	24311-240100	O-RING, 1AP10A	1							
38-1	2	24316-240100	O-RING, 4DP10A	1						N	
	(A=E25227)										
39	1	119225-52102	PUMP, FUEL FEED	1						W	
	(A=E25227)										

N:Old ◄Yes/No► New. Q:Old ◄No/Yes► New, R:Old ◄Yes/Yes► New, S:Old ◄No/No► New. W:Add, Z:Discontinued. F:Interchangeable by set. K:Q'ty Change

Copyright (C) 2014 YANMAR GLOBAL CS CO., LTD. All RightsReserved.

Fig.14. STARTER MOTOR

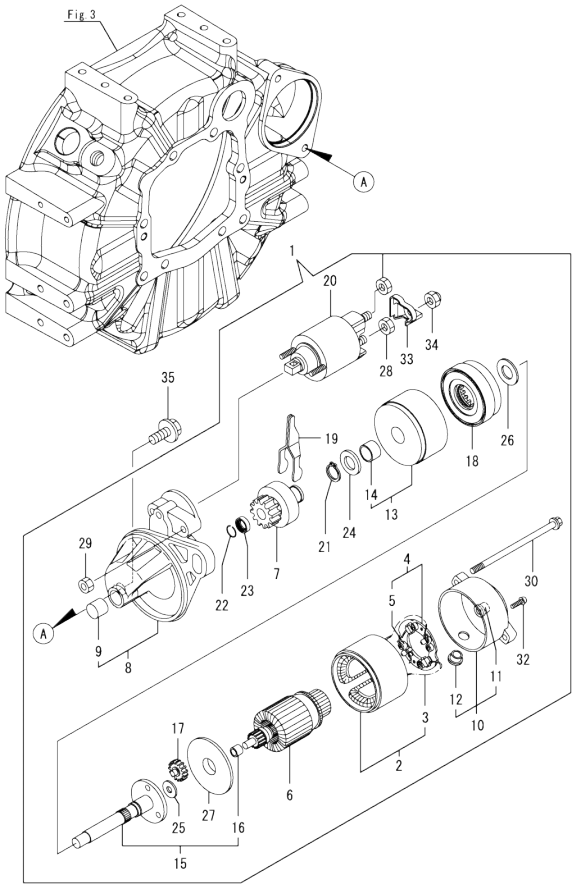

(A)=3TNM74F-NHGE (D)=
(B)= (E)=
(C)= (F)=

No.	Lev.	Parts No.	Description	Q'ty (A)	(B)	(C)	(D)	(E)	(F)	I	R
1	1	119515-77010	STARTER	1							
2	2	X0281007680	YOKE ASSY	1							
3	3	X0280996180	STARTER KIT	2							
4	2	X0285105190	HOLDER ASSY	1							
5	3	X0285205030	SPRING	4							
6	2	X0282005871	ARMATURE ASSY	1							
7	2	X0283006960	CLUTCH ASSY	1							
8	2	X4284001590	HOUSING ASSY	1							
9	3	X9491050100	BEARING, NEEDLE	1							
10	2	X0285007030	FRAME ASSY	1							
11	3	X9491040990	BEARING	1							
12	3	X0280626010	COVER	1							
13	2	X0284105040	BEARING ASSY	1							
14	3	X9491034330	BEARING	1							
15	2	X0286105010	SHAFT ASSY	1							
16	3	X9491034320	BEARING	1							
17	2	X0286305010	GEAR	3							
18	2	X0286355010	GEAR	1							
19	2	X0287405140	LEVER	1							
20	2	X0534007800	SWITCH ASSY	1							
21	2	X9055715000	RING	1							
22	2	X9490721360	RING	1							
23	2	X0280210331	NUT	1							
24	2	X9490138110	WASHER	1							
25	2	X9490138090	WASHER	1							
26	2	X9490138100	WASHER	1							
27	2	X0284525010	PLATE	1							
28	2	X9490562360	NUT	1							
29	2	X9490560750	NUT	2							
30	2	X9490423520	BOLT, THROUGH	2							
32	2	X9490065670	SCREW, M4X6	2							
33	2	X0280335360	COVER, TERMINAL	1							
34	2	X1289510130	NUT	1							
35	1	26106-100252	BOLT, M10X 25 PLATED	2							

N:Old ←Yes/No→ New. Q:Old ←No/Yes→ New. R:Old ←Yes/Yes→ New. S:Old ←No/No→ New. W:Add. Z:Discontinued. F:Interchangeable by set. K:Q'ty Change

Copyright (C) 2014 YANMAR GLOBAL CS CO., LTD. All RightsReserved.

Fig.15. GENERATOR

(A)=3TNM74F-NHGE
(B)=
(C)=
(D)=
(E)=
(F)=

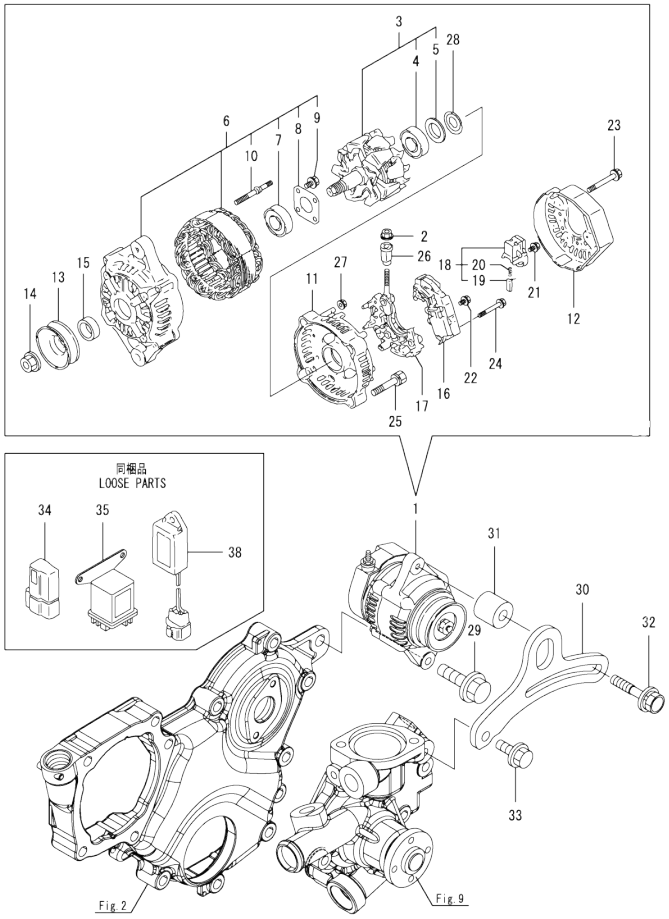

No.	Lev.	Parts No.	Description	Q'ty (A)	(B)	(C)	(D)	(E)	(F)	I	R
1	1	129423-77200	GENERATOR, 12V-40A	1							
2	2	X9490561001	NUT	1							
3	2	119620-77380	ROTOR ASSY	1							
4	3	123501-79240	BEARING, BALL	1							
5	3	119620-79250	COVER	1							
6	2	119620-77421	FRAME ASSY, DRIVE	1							
7	3	119620-79200	BEARING, BALL	1							
8	3	119620-79210	PLATE, RETAINER	1							
9	3	119620-79220	SCREW	4							
10	3	119620-79230	STUD	2							
11	2	119620-77440	FRAME ASSY	1							
12	2	129240-79300	COVER	1							
13	2	119620-77461	PULLEY	1							
14	2	119620-77471	NUT	1							
15	2	119620-77490	COLLAR	1							
16	2	129423-77710	REGULATOR ASSY	1							
17	2	119620-79260	HOLDER	1							
18	2	129052-79270	HOLDER, BRUSH	1							
19	3	119620-77480	BRUSH ASSY	2							
20	3	119620-79280	SPRING	2							
21	2	119620-79290	SCREW	6							
22	2	119620-79300	SCREW	1							
23	2	119620-79310	BOLT	3							
24	2	119620-79320	SCREW	2							
25	2	119620-79330	BOLT	2							
26	2	119620-79340	BUSH, INSULATION	1							
27	2	119620-79350	NUT	2							
28	2	119620-79360	WASHER, THRUST	1							
29	1	26106-100402	BOLT, M10X 40 PLATED	1							
30	1	119125-77320	ADJUSTER	1							
31	1	124732-77340	SPACER	1							
32	1	129972-77341	BOLT, ADJUSTER L=50	1							
33	1	26106-080202	BOLT, M8X 20 PLATED	1							
34	1	119643-66900	DIODE	1							
35	1	119650-77911	RELAY ASSY, GLOW	1							
38	1	129211-77920	TIMER	1							

N:Old ←Yes/No→ New. Q:Old ←No/Yes→ New. R:Old ←Yes/Yes→ New. S:Old ←No/No→ New. W:Add. Z:Discontinued. F:Interchangeable by set. K:Q'ty Change

Copyright (C) 2014 YANMAR GLOBAL CS CO., LTD. All RightsReserved.

Parts No. Index

Parts No.	Fig. No.	Ref. No.
101304-59020	13	15
101720-55750	13	34
102103-55520	13	5
		29
103854-39140	13	14
104200-55321	13	25
104200-55330	13	2
		26
104200-55341	13	27
104200-55750	13	9
		35
105010-11490	4	3
105230-59510	12	34
	13	18
106760-01770	2	6
110250-55610	13	6
		30
114110-07761	13	23
114250-39450	8	14
114270-59010	12	33 -1
	13	20 -1
119000-59550	12	40
119025-01530	2	1
119025-01690	3	8
119025-01760	3	7
119025-14580	6	3
119025-25100	6	9
119025-34810	8	3
119025-42000	9	1
119025-42020	9	3
119025-42030	9	4
119028-35080	8	9
119028-55650	13	11
119125-01750	2	2
119125-01790	1	32
119125-01800	1	33
119125-01960	1	7
119125-01970	1	5
119125-02061	1	9
119125-02900	1	36
119125-02910	1	39
119125-02930	1	23
119125-02940	1	42
119125-21200	7	4
119125-21650	7	7
119125-25050	1	26
119125-25910	6	15
119125-25930	6	13
119125-32000	8	1
119125-34810	8	5

Parts No.	Fig. No.	Ref. No.
119125-34900	8	4
119125-39200	8	11
119125-39220	8	12
119125-51700	10	79
119125-51800	1	35
119125-52000	10	97
119125-59560	12	36
119125-59570	12	38
119125-77320	15	30
119131-18320	5	5
119209-35030	8	8
119225-52102	13	39
119265-44740	9	18
119285-11990	4	11
119305-35170	8	15
119515-11200	4	20
119515-11240	4	21
119515-11280	4	25
119515-11310	4	44
119515-11320	4	45
119515-11330	4	46
119515-11380	4	34
119515-11800	4	55
119515-13200	5	7
119515-14400	6	2
119515-23000	7	23
119515-23601	7	27
119515-23611	7	30
119515-42020	9	12
119515-77010	14	1
119546-59031	12	32 -1
119546-59531	12	34 -1
119546-61440	11	26
119600-11460	4	2
119620-01620	1	13
119620-01750	3	5
119620-02450	6	4
119620-14200	6	1
119620-21941	7	9
119620-59700	12	42
119620-77380	15	3
119620-77421	15	6
119620-77440	15	11
119620-77461	15	13
119620-77471	15	14
119620-77480	15	19
119620-77490	15	15
119620-79200	15	7
119620-79210	15	8
119620-79220	15	9

Parts No.	Fig. No.	Ref. No.
119620-79230	15	10
119620-79250	15	5
119620-79260	15	17
119620-79280	15	20
119620-79290	15	21
119620-79300	15	22
119620-79310	15	23
119620-79320	15	24
119620-79330	15	25
119620-79340	15	26
119620-79350	15	27
119620-79360	15	28
119621-21681	7	8
119643-66900	15	34
119650-77911	15	35
119653-77950	11	94
119685-42281	9	8
119717-01800	2	3
119717-03031	4	35
119717-03070	4	36
		37
119717-11131	4	15
119717-11190	4	17
119717-11260	4	24
119717-11340	4	18
119717-11350	4	19
119717-11650	4	26
119717-13109	5	1
119717-13110	5	2
119717-13600	5	3
119717-22300	7	21
119717-23200	7	26
119717-23910	7	29
119717-35140	8	6
119717-49800	9	22
119717-51150	6	14
119717-51420	10	27
119717-51711	10	80
119717-51750	10	81
119717-51761	10	82
119717-51860	10	94
119717-51930	11	2
119717-61050	11	3
119717-61060	11	84
119717-61070	11	4
119717-77801	4	53
119717-77820	4	54
119734-02220	1	34
119740-42350	9	16
119740-61470	11	83 -1

Parts No.	Fig. No.	Ref. No.
119741-55700	13	24 -1
119802-03100	4	38
119802-03110	4	39
119802-03121	4	40
119802-03131	4	41
119802-03141	4	42
119802-13620	5	4
119810-01200	1	30
119810-55340	13	3
119810-55650	13	8
119833-55621	13	1
119840-59570	12	41
119865-21600	7	14
119888-01850	3	4
119C10-01330	1	31
119C10-11100	4	13
119C10-11110	4	14
119C10-22500	7	17
119C10-22550	7	33
119C10-53000	12	1
119C10-53010	12	3
119D00-01560	1	1
119D00-01610	3	2
119D00-11740	4	4
119D00-21580	7	12
119D00-21700	7	1
119D00-22080	7	15
119D00-22900	7	32
119D00-59540	12	35
119D00-59810	12	20
119D00-59820	12	24
119D00-59830	12	28
119E20-55600	13	1 -1
121023-01551	2	8
121111-21501	7	11
121250-44901	9	26
121250-55620	13	7
121254-55510	13	4
121257-55720	13	31
121257-55731	13	32
121450-42450	9	25
122710-51090	10	8
123501-79240	15	4
124060-01050	1	4
124064-55510	13	28
124066-59100	12	39
124160-01751	4	33
124465-44950	9	27
		28
124732-77340	15	31

Parts No. Index

Parts No.	Fig. No.	Ref. No.
124766-59050	12	33
	13	17
		20
129052-79270	15	18
129100-01580	3	1
	7	2
129100-52200	10	97 -1
129150-11230	4	27
129150-11750	4	29
129150-25301	6	12
129150-59120	12	15
129150-59131	12	18
129155-51020	10	5
129155-51280	10	18
129155-51400	10	25
129155-51580	10	46
129155-52051	10	98
129155-61460	11	70
129155-61461	11	70 -1
129210-59140	12	32
	13	16
129210-59230	13	19
129211-77920	15	38
129236-59501	13	21 -1
129240-79300	15	12
129335-55701	13	24
129350-49530	9	21
129423-77200	15	1
129423-77710	15	16
129457-44760	9	19
129486-59522	12	40 -1
129486-59582	12	38 -1
129508-11180	4	16
129555-59511	13	21
129630-77910	11	94 -1
129900-32040	1	27
129901-11450	4	1
129901-53800	12	4
129901-59560	12	37
129972-77341	15	32
129988-59000	13	19 -1
158552-61900	11	71
158600-51410	10	26
158600-51420	10	28
158600-51570	10	45
158600-51790	10	83
171056-49120	9	24
171081-55910	13	36
22190-100002	11	75
22190-120002	12	43

Parts No.	Fig. No.	Ref. No.
22190-120002	13	22
22190-160002	3	10
	10	85
22217-120000	10	86
22242-000120	4	30
22252-000220	7	22
22351-030010	7	10
22351-050010	10	87
22351-060012	1	28
22372-040000	11	77
22512-040120	7	5
22857-500100	4	47
		48
22857-500160	4	49
23414-080000	9	13
23418-060000	13	37
23876-005000	1	10
	4	12
24311-000180	2	7
24311-000320	4	50
24311-240100	13	10
		38
24316-000440	13	29 -1
24316-240100	13	38 -1
24341-000240	2	9
25132-003450	9	17
26014-080702	13	12
26022-050122	10	91
26106-060102	8	10
	11	79
26106-060122	6	8
	8	13
26106-060142	8	2
	11	80
26106-060162	2	10
26106-060202	4	51
	11	81
26106-060352	3	11
26106-060402	1	29
26106-060452	9	20
	11	82
26106-060752	4	52
26106-080122	9	14
26106-080162	13	13
26106-080202	9	23
	15	33
26106-080352	2	4
26106-080402	4	32
26106-080452	2	5
	9	15

Parts No.	Fig. No.	Ref. No.
26106-100252	14	35
26106-100402	15	29
26206-100252	3	6
26306-080002	5	6
26366-080002	11	65
26577-060122	9	10
26716-120002	10	93
26756-060002	11	83
26979-050162	4	31
27241-300000	1	11
27241-450000	1	12
719D28-51310	10	1 -1
719D28-51490	10	1
X0280210331	14	23
X0280335360	14	33
X0280626010	14	12
X0280996180	14	3
X0281007680	14	2
X0282005871	14	6
X0283006960	14	7
X0284105040	14	13
X0284525010	14	27
X0285007030	14	10
X0285105190	14	4
X0285205030	14	5
X0286105010	14	15
X0286305010	14	17
X0286355010	14	18
X0287405140	14	19
X0534007800	14	20
X1289510130	14	34
X4284001590	14	8
X9055715000	14	21
X9490065670	14	32
X9490138090	14	25
X9490138100	14	26
X9490138110	14	24
X9490423520	14	30
X9490560750	14	29
X9490561001	15	2
X9490562360	14	28
X9490721360	14	22
X9491034320	14	16
X9491034330	14	14
X9491040990	14	11
X9491050100	14	9

Parts No.	Fig. No.	Ref. No.